DATASHEET

THREE PHASE INDUCTION MOTOR - SQUIRREL CAGE

IE3

Type : 3EL090S2B-FA-A0-000 **Date** : 06/04/2026

Power [kW]	: 1.50	Efficiency Class	: IE3
Input Voltage [V]	: 400	Duty Cycle	: S1
Connection Type [Δ / Y]	: Y	Service Factor	: 1.20
Frequency [Hz]	: 50	Frame Size	: 090S
Pole Number	: 2	Weight [kg]	: 15.6
Nominal Speed [rpm]	: 2900	Insulation Class	: F [155°C]
Nominal Current [A]	: 2.97	Temperature Rise	: B [80˚K]
Nominal Moment [Nm]	: 4.93	Protection Class	: IP55
Nominal Efficiency [η]	: 84.8	Vibration Severity Grade	: A
Power Factor [cosϕ]	: 0.86	Method of Cooling	: IC411 (TEFC)
Locked Rotor Current [Ia/In]	: 7.6	Direction of Rotation	: Bidirectional
Locked Rotor Torque [Ma/Mn]	: 3.1	Balance	: Half Key
Breakdown Torque [Mk/Mn]	: 3.9	Motor Thermal Protection	: --
Motor Color	: RAL 7031	Altitude Above Sea Level	: 1000m
Ambient Temperature	: -15°C / +40°C	Sound Pressure Level [dBA]	: 59

ELECTRICAL DATA

Δ / Y	U [V]	f [Hz]	P [kW]	n [rpm]	I [A]	η [%100]	η [%75]	η [%50]	Cosφ	Cl
Δ	230	50	1.50	2900	5.14	84.8	85.4	84.2	0.86	IE3
Y	400	50	1.50	2900	2.97	84.8	85.4	84.2	0.86	IE3
Y	460	60	1.50	3500	2.59	85.5	85.7	84.1	0.85	IE3
Y	460	60	1.74	3490	2.93	85.7	85.9	84.3	0.87	IE3

MECHANICAL DATA

Moment of Inertia [kgm^2]	: 0.00178
Bearing [DS / NS]	: 6205ZZ C3 / 6205ZZ C3
Frame Material	: Aluminum
Flange Type / Material	: B5 / Aluminum
Cooling Fan Material	: Plastic
End Shield Material	: Aluminum

TERMINAL BOX

Terminal Box Material	: Aluminum
Terminal Box Position	: Top
Terminal Box Cable Entry	: M20x1.5
Terminal Box Blind Cap	: M16x1.5
Contact Screw Thread	: M4

MECHANICAL DIMENSIONS

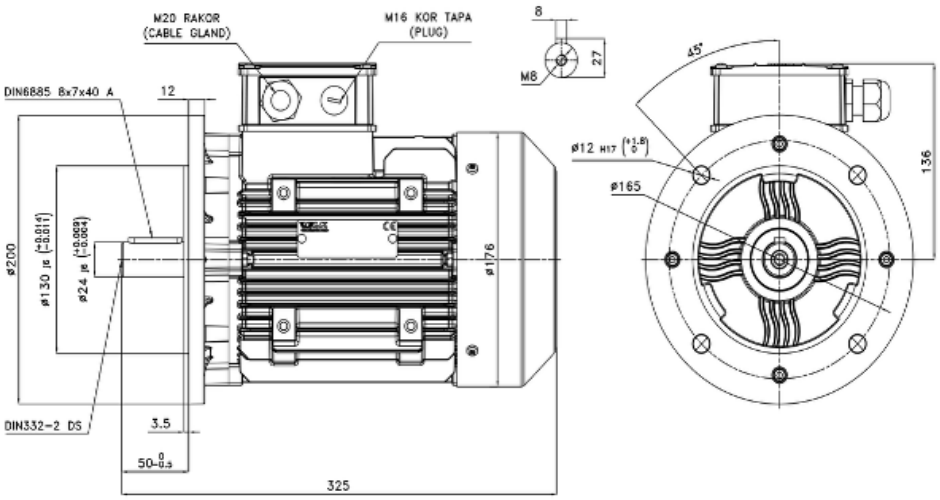

Manufactured and tested in accordance with IEC 60034

FR.AG.010 REV.NO: 04 REV.DATE: 01.01.2023

*Technical data are subject to change! There may be discrepancies between calculated and rating plate values.

*ELK Motor has right to change all the data without prior notice.

TECHNICAL DATASHEET ACCORDING TO COMMISSION REGULATION (EU) 2019/1781

THREE PHASE INDUCTION MOTOR - SQUIRREL CAGE

Type : 3EL090S2B-FA-A0-000 **Date** : 06/04/2026

NAMEPLATE DATA

Power [kW]	: 1.50	Nominal Speed [rpm]	: 2900
Nominal Voltage [V]	: 400	Nominal Current [A]	: 2.97
Connection Type [Δ / Y]	: Y	Nominal Moment [Nm]	: 4.93
Nominal Frequency [Hz]	: 50	Nominal Efficiency [η%]	: 84.8

THE POWER LOSSES AT SEVEN OPERATING POINTS ACCORDING TO COMMISSION REGULATION (EU) 2019/1781

Operating Point Number	Speed n/n_N [%]	Torque T/T_N [%]	Relative Power Losses P_L/P_N [%]	Efficiency η [%]
P_1	90	100	16.4	84.6
P_2	50	100	13.0	79.4
P_3	25	100	11.6	68.3
P_4	90	50	9.2	83.0
P_5	50	50	6.0	80.7
P_6	50	25	4.6	73.1
P_7	25	25	2.7	69.8

MAP OF RELATIVE POWER LOSSES P_L/P_N [%]

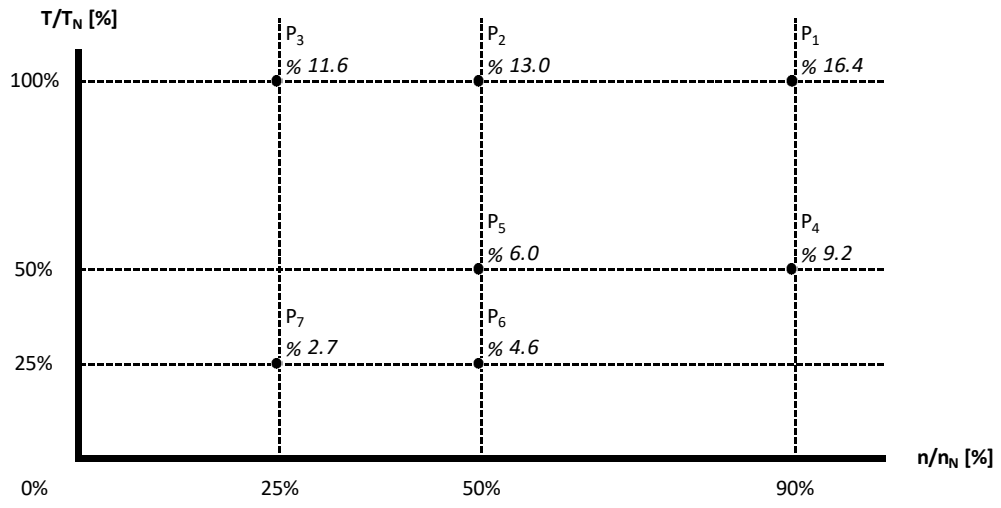

Manufactured and tested in accordance with IEC 60034

FR.AG.010 REV.NO: 04 REV.DATE: 01.01.2023

*Technical data are subject to change! There may be discrepancies between calculated and rating plate values.
*ELK Motor has right to change all the data without prior notice.

Motor Code : 3EL090S2B-FA-A0-000

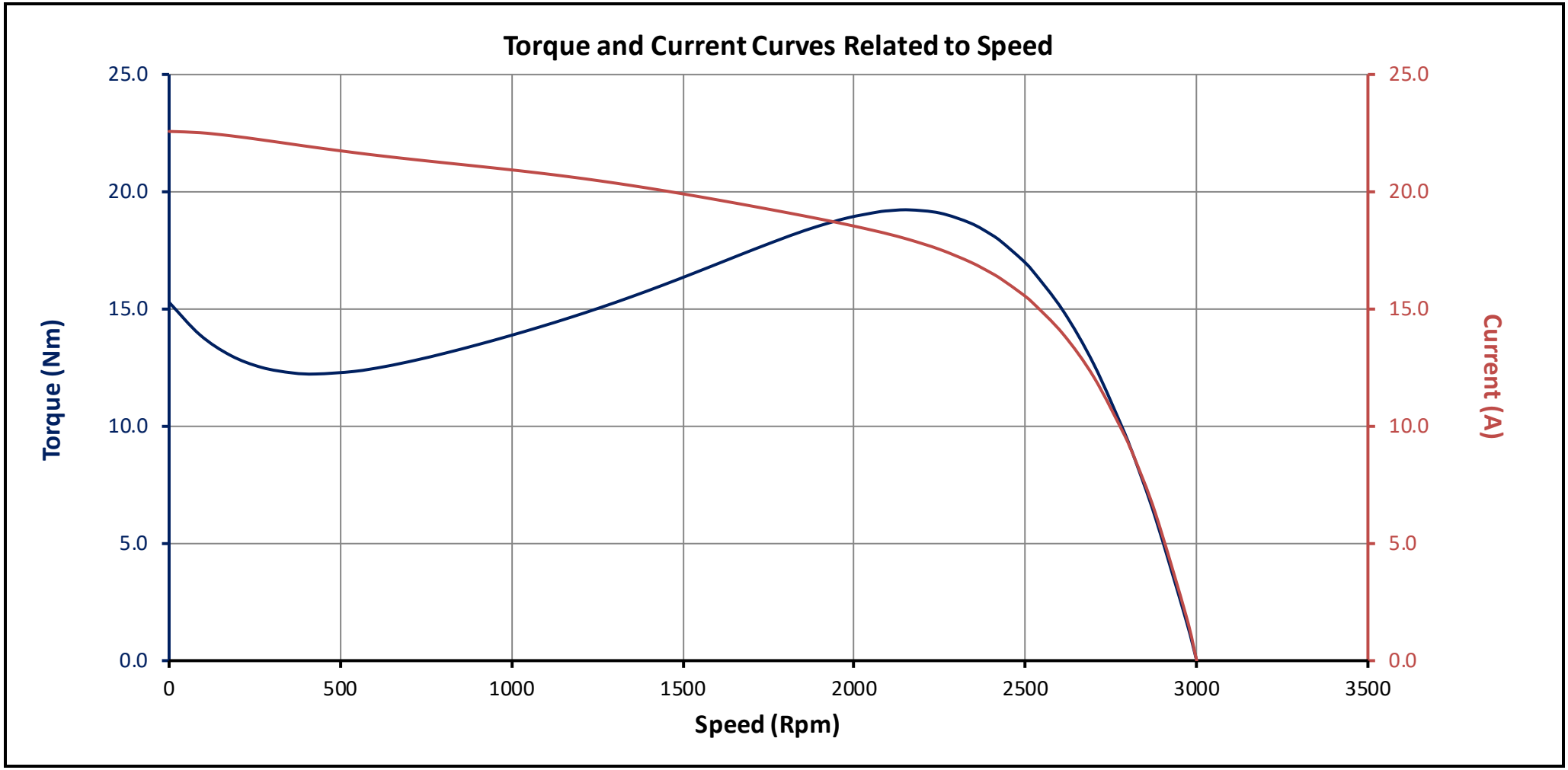
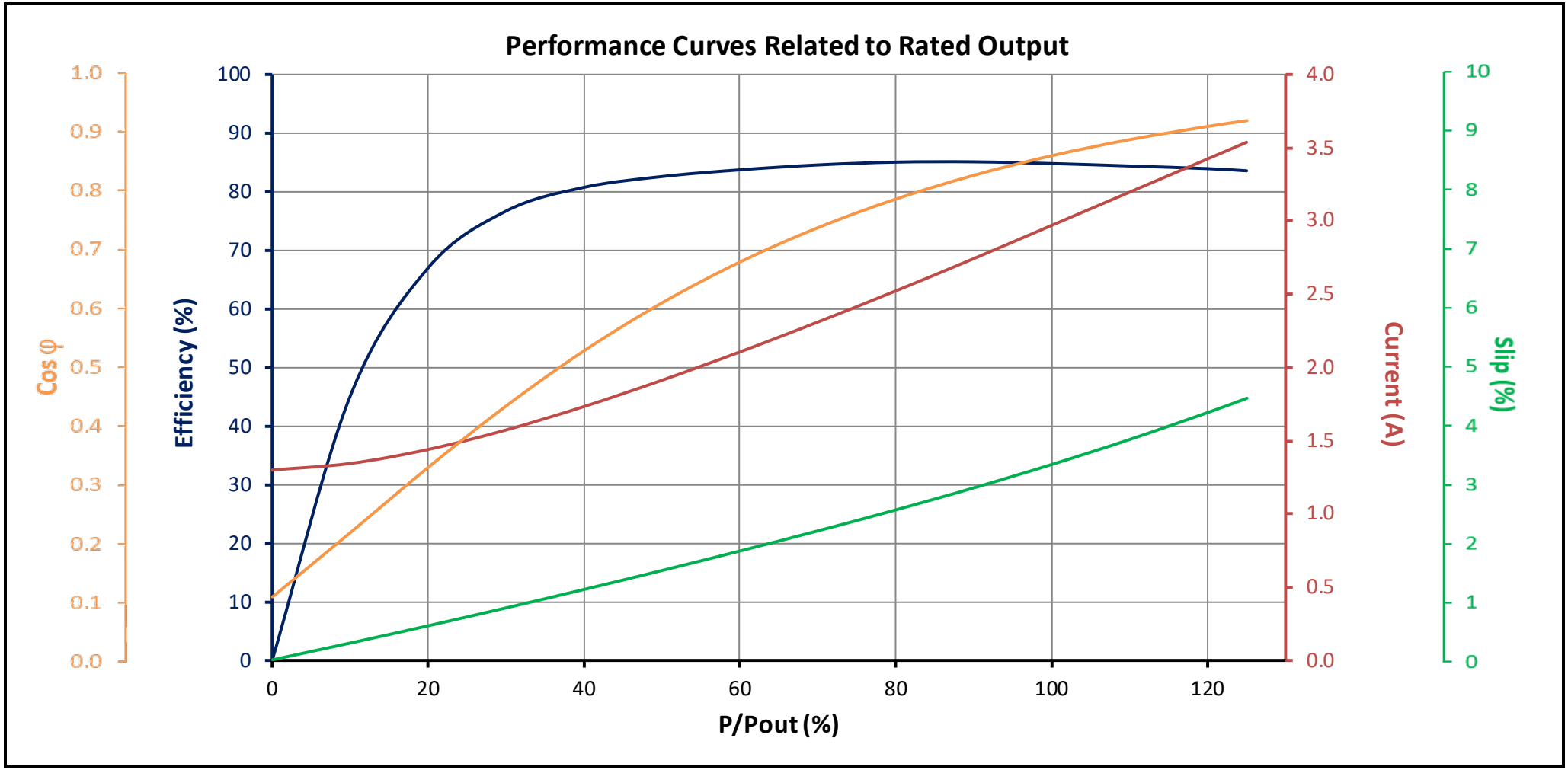
Motor Code : 3EL090S2B-FA-A0-000